# IPA

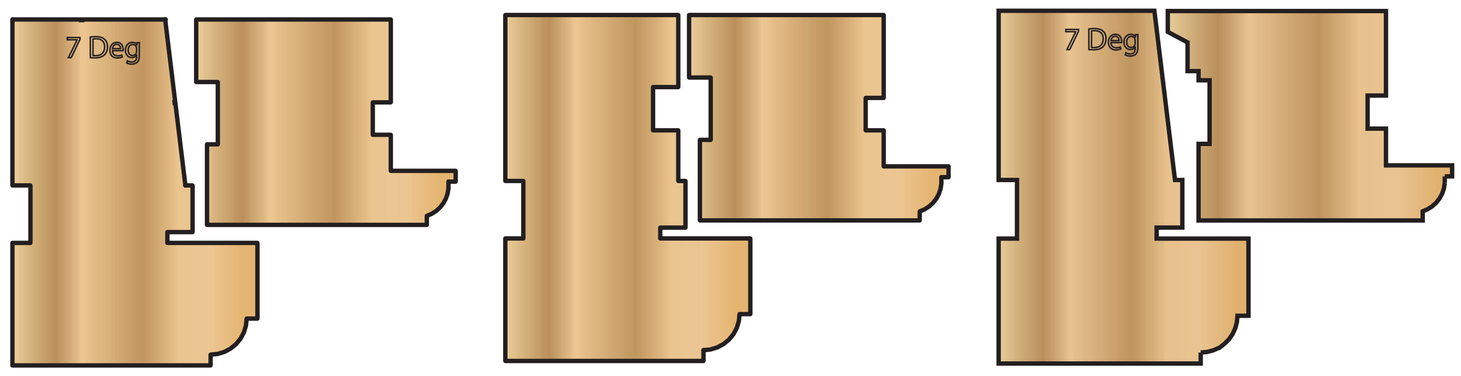


## Frame Profile

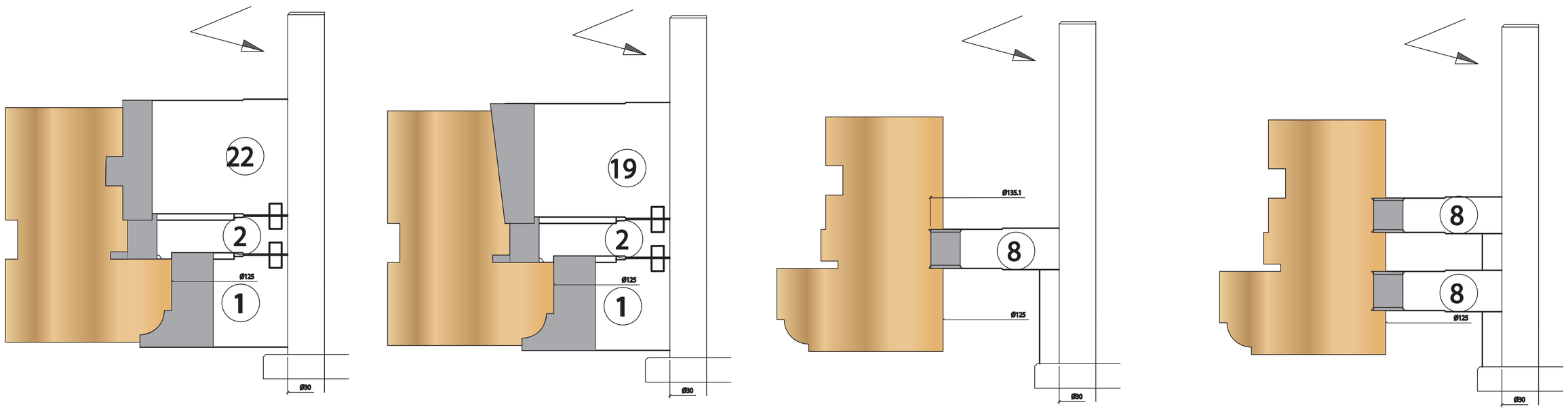


## Tenon Frame

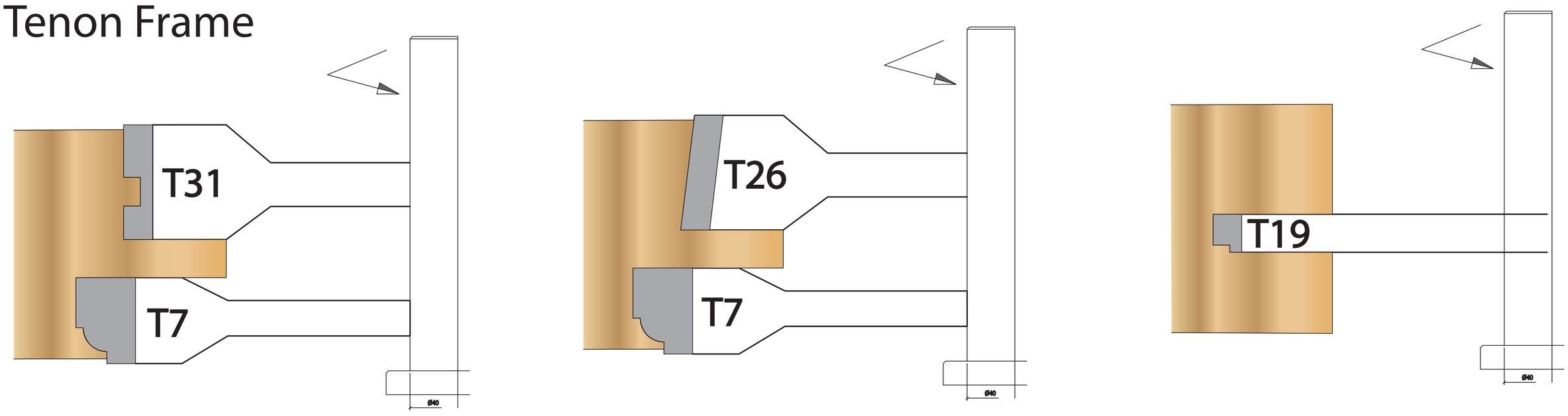


## Frame Comb Joint

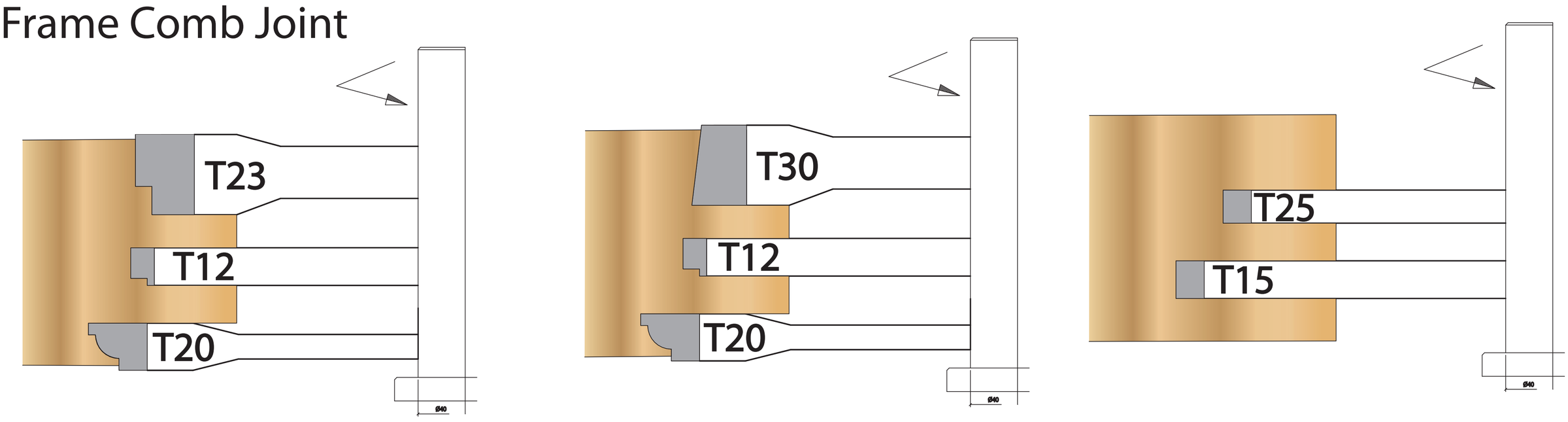


## Casement Sash Profile

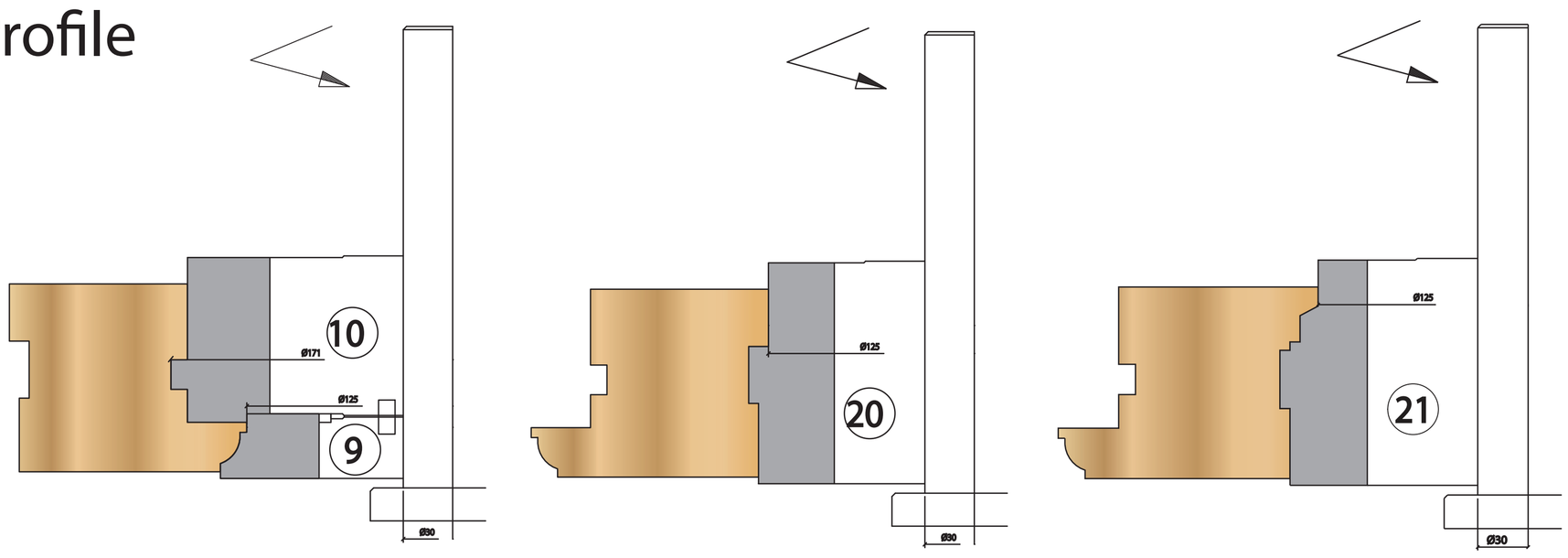

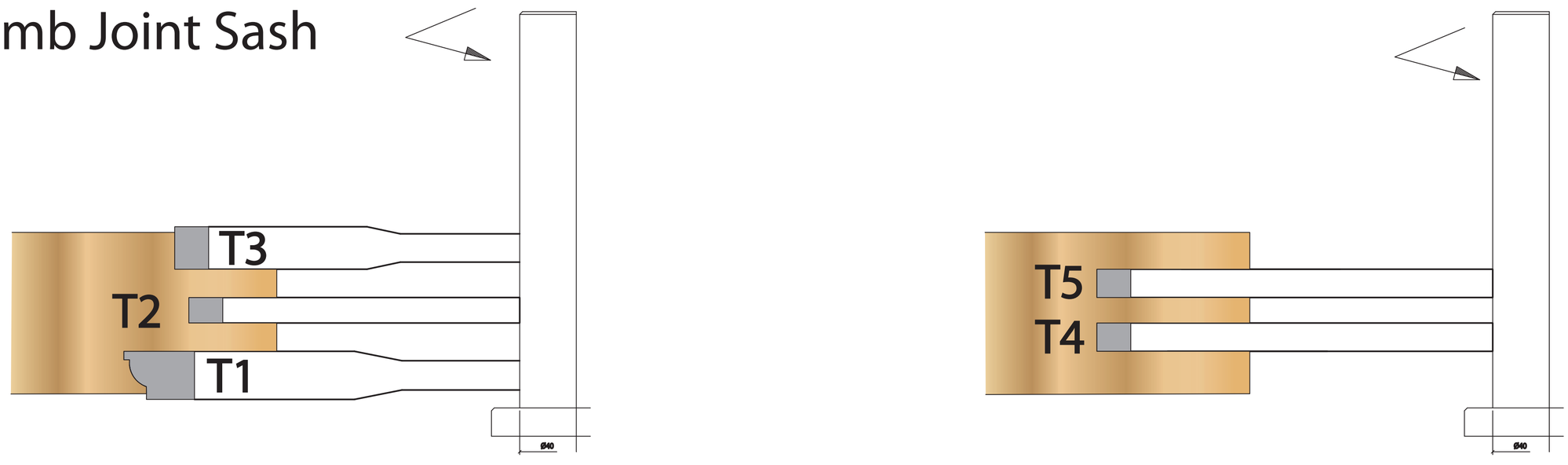
## Comb Joint Sash